SGS No. 08190322KTN.UU45

KTN
Kara Technology News

FIG. 291M

SS PULL HANDLE CLAMP BUTTERFLY VALVE

1/2" - 4" | PN16

+34 916 921 732 ktn@ktnvalves.com www.ktnvalves.com

KTN CLAMP ENDS BUTTERFLY VALVES:

The **KTN 291M** is our butterfly valve designed for the **sanitary industry** with clamp connection.The sanitary clamp butterfly valve comes with a **trigger locking mechanism** with a pull handle to allow **precise process flow control.** Triple clamp connections allow for **easy assembly / disassembly** for cleaning processes.This product comes standardized with **316L stainless steel alloy**. We recommend the use of single pin clamp joints to safely connect this product to the rest of your system.

1 Body:

Body made of top accuracy CNC mechanized 316L stainless steel with clamp ends to ease maintenance and cleaning operations

2 Stem and disc:

The stem is made in one piece and is mechanically retained in the neck of the body so no part of the stem is exposed to fluid.

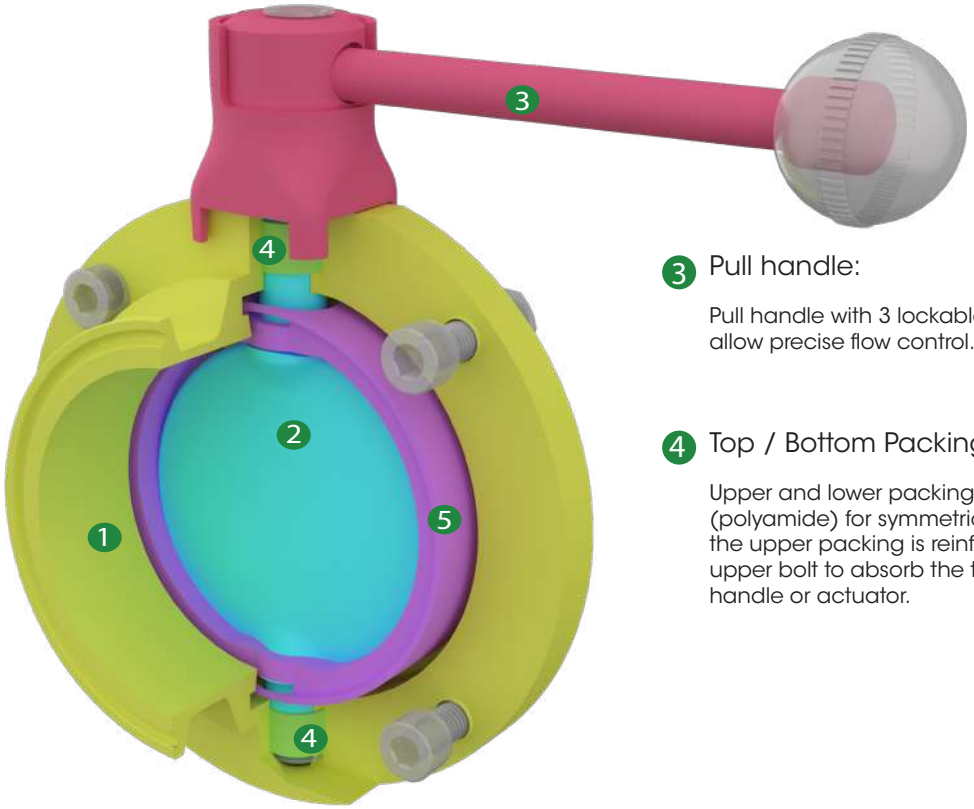

3 Pull handle:

Pull handle with 3 lockable positions to allow precise flow control.

4 Top / Bottom Packing:

Upper and lower packing made of PA (polyamide) for symmetrical tightness, the upper packing is reinforced by an upper bolt to absorb the torsion of the handle or actuator.

5 Seat design:

The design of the seat reduces the torque of the seat and, at the same time, reduces the wear of the parts in contact. Curvatures in the machining of the inner area of the seat minimize contact forces between the disc and the seat when the disc approaches, or opens from, the closed position.This unique seat geometry allows for lower torques and reduces seat wear.

KTN 291M | TECHNICAL FEATURES

STAINLESS STEEL PULL HANDLE CLAMP BUTTERFLY VALVE

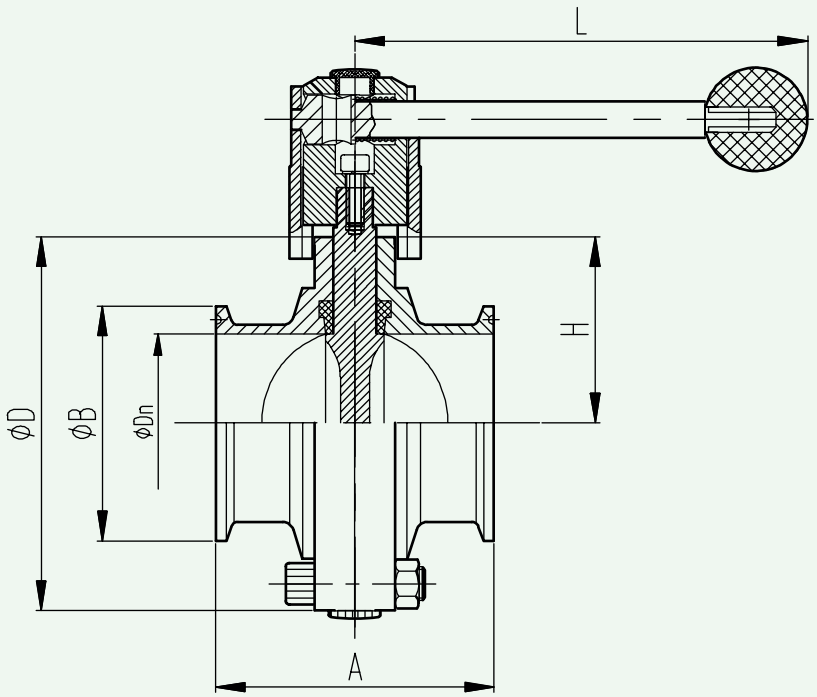

OUTLINE DIMENSIONS						
DN	"	D	B	A	H	L
15	1/2	78	25.4	66	39	140
20	3/4	78	25.4	66	39	140
25	1	78	50.5	66	39	140
40	1 1/2	86	50.5	70	43	140
54	2	100	64	76	51	150
65	2 1/2	115	77.5	80	57.5	160
80	3	128	91	84	64	160
100	4	154	119	104	77	180

Floating flow coefficient table (PN16/150#/JIS10)									
DN	25	32	40	50	65	80	100	125	150
CV	2,5	5,5	9	25	35	50	80	190	350

Opening torque (PN16/150#/JIS10)									
DN	25	32	40	50	65	80	100	125	150
Nm	8	9	10	14	18	20	35	55	70

Weight (PN16)									
DN	25	32	40	50	65	80	100	125	150
Kg	1,28	1,16	1,29	1,66	2,31	2,85	3,75	5,35	7,15

KTN 291M | SPLIT PARTS

STAINLESS STEEL PULL HANDLE CLAMP BUTTERFLY VALVE

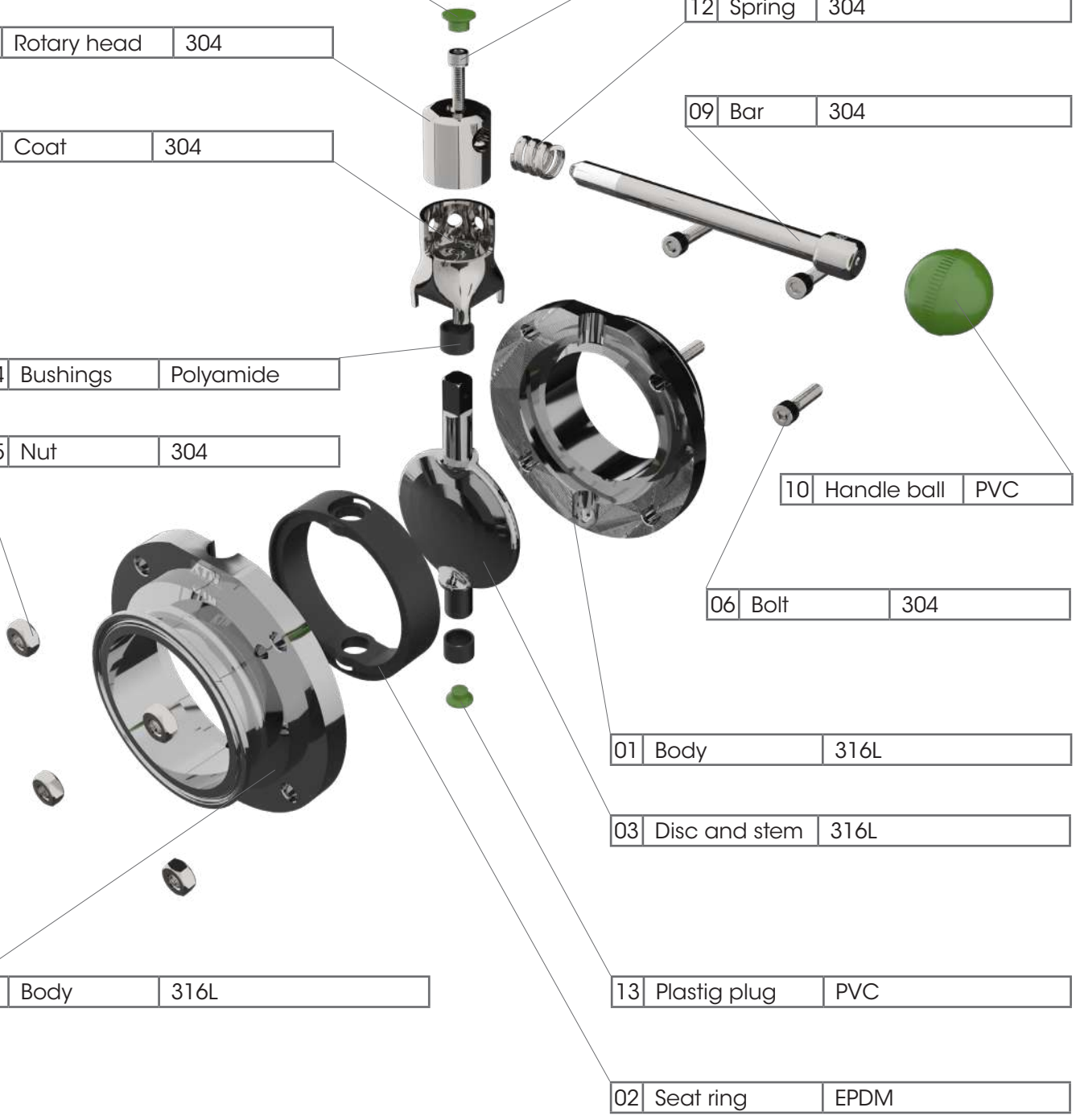

14	Plastig plug	PVC
07	Rotary head	304
08	Coat	304
04	Bushings	Polyamide
05	Nut	304
01	Body	316L
11	Bolt	304
12	Spring	304
09	Bar	304
10	Handle ball	PVC
06	Bolt	304
01	Body	316L
03	Disc and stem	316L
13	Plastig plug	PVC
02	Seat ring	EPDM